ORF522 – Linear and Nonlinear Optimization

5. The simplex method II

Bartolomeo Stellato — Fall 2024

Recap

Standard form polyhedra

Definition

Standard form LP

$$\begin{array}{ll} \text{minimize} & c^T x \\ \text{subject to} & Ax = b \\ & x \geq 0 \end{array}$$

Standard form polyhedron

$$P = \{x \mid Ax = b,\ x \geq 0\}$$

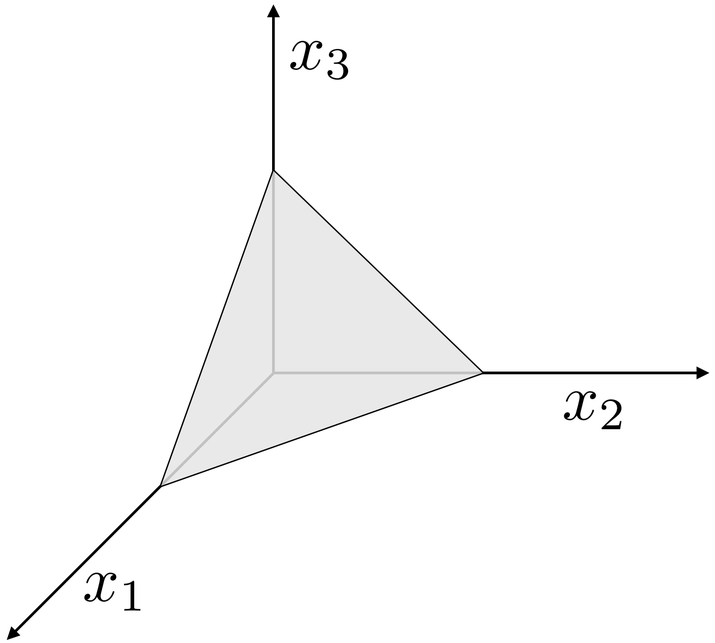

Assumption

$A \in \mathbf{R}^{m \times n}$ has full row rank $m \leq n$

Interpretation

P lives in $(n - m)$-dimensional subspace

Standard form polyhedra

Visualization

$$P = \{x \mid Ax = b,\ x \geq 0\}, \quad n - m = 2$$

Three dimensions

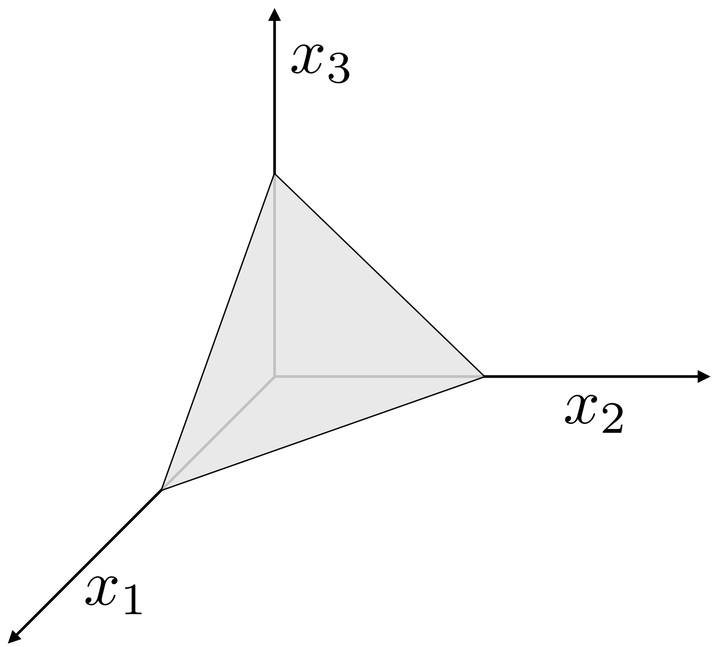

Higher dimensions

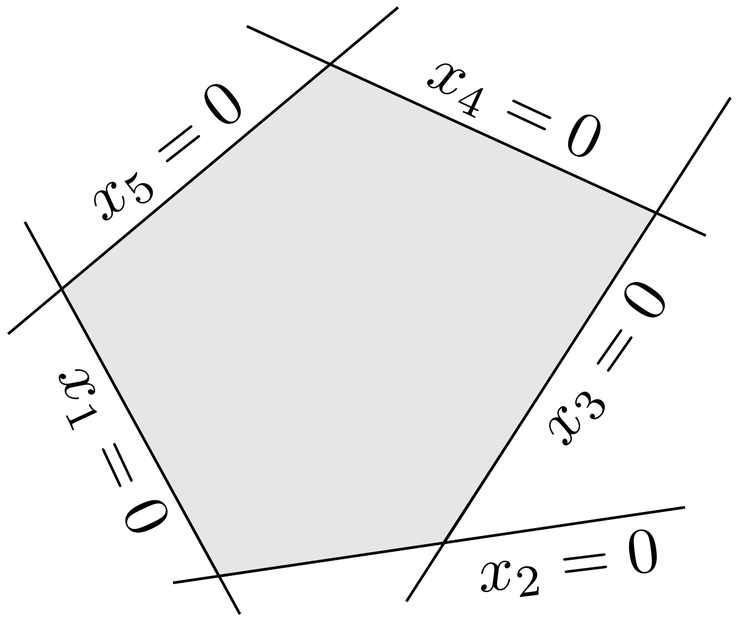

Neighboring solutions

Two basic solutions are **neighboring** if their basic indices differ by exactly one variable

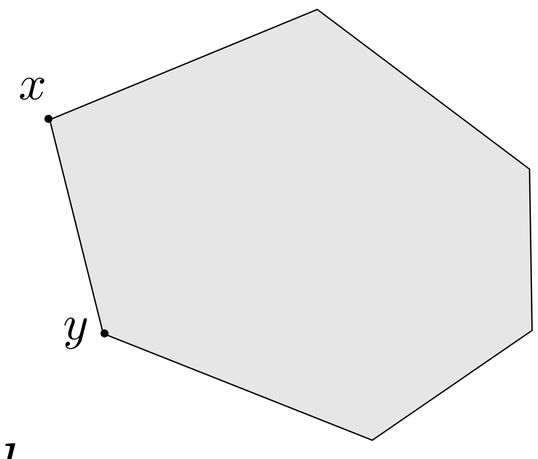

Example

$$\overset{A}{\begin{bmatrix} 1 & -1 & 0 & 3 & -2 \\ 2 & 0 & -1 & -1 & 0 \\ 0 & 2 & 4 & -1 & 4 \end{bmatrix}} \begin{bmatrix} x_1 \\ x_2 \\ x_3 \\ x_4 \\ x_5 \end{bmatrix} = \overset{b}{\begin{bmatrix} -5 \\ -1 \\ 14 \end{bmatrix}}$$

$B = \{1, 3, 5\}$ $\quad x_2 = x_4 = 0$

$$A_B x_B = b \longrightarrow x_B = \begin{bmatrix} x_1 \\ x_3 \\ x_5 \end{bmatrix} = \begin{bmatrix} 0 \\ 1 \\ 2.5 \end{bmatrix}$$

$\bar{B} = \{1, 3, 4\}$ $\quad y_2 = y_5 = 0$

$$A_{\bar{B}} y_{\bar{B}} = b \longrightarrow y_{\bar{B}} = \begin{bmatrix} y_1 \\ y_3 \\ y_4 \end{bmatrix} = \begin{bmatrix} 0.1 \\ 3.0 \\ -1.7 \end{bmatrix}$$

Feasible directions

Conditions

$$P = \{x \mid Ax = b,\ x \geq 0\}$$

Given a basis matrix $A_B = \begin{bmatrix} A_{B(1)} & \dots & A_{B(m)} \end{bmatrix}$

we have basic feasible solution x:

- x_B solves $A_B x_B = b$
- $x_i = 0,\ \forall i \neq B(1), \dots, B(m)$

Let $x \in P$, a vector d is a **feasible direction** at x

if $\exists \theta > 0$ for which $x + \theta d \in P$

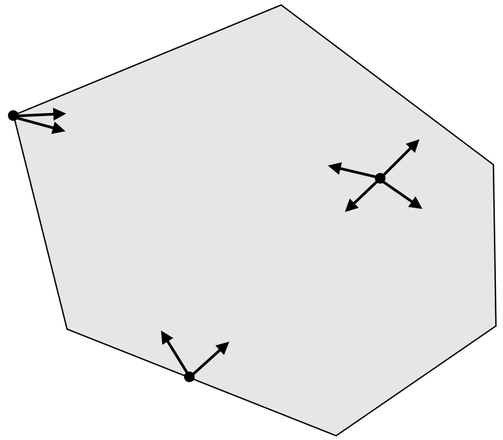

Feasible direction d

- $A(x + \theta d) = b \implies Ad = 0$
- $x + \theta d \geq 0$

Feasible directions

Computation

Feasible direction d

- $A(x + \theta d) = b \implies Ad = 0$
- $x + \theta d \geq 0$

Nonbasic indices

- $d_j = 1 \longrightarrow$ **Basic direction**
- $d_k = 0,\ \forall k \notin \{j, B(1), \ldots, B(m)\}$

Basic indices

$$Ad = 0 = \sum_{i=1}^{n} A_i d_i = A_B d_B + A_j = 0 \implies d_B = -A_B^{-1} A_j$$

Non-negativity (non-degenerate assumption)

- Non-basic variables: $x_i = 0$. Nonnegative direction $d_i \geq 0$
- Basic variables: $x_B > 0$. Therefore $\exists \theta > 0$ such that $x_B + \theta d_B \geq 0$

Stepsize

What happens if some $\bar{c}_j$ < 0?

We can decrease the cost by bringing x_j into the basis

How far can we go?

$\theta^\star = \max\{\theta \mid \theta \geq 0$ and $x + \theta d \geq 0\}$ d is the j-th basic direction

Unbounded

If $d \geq 0$, then $\theta^\star = \infty$. The LP is unbounded.

Bounded

If $d_i < 0$ for some i, then $$\theta^\star = \min_{\{i \mid d_i < 0\}} \left(-\frac{x_i}{d_i}\right) = \min_{\{i \in B \mid d_i < 0\}} \left(-\frac{x_i}{d_i}\right)$$

(Since $d_i \geq 0,\ i \notin B$)

Moving to a new basis

Next feasible solution

$$x + \theta^\star d$$

Let $B(\ell) \in \{B(1), \ldots, B(m)\}$ be the index such that $\theta^\star = -\dfrac{x_{B(\ell)}}{d_{B(\ell)}}$. Then,

$$x_{B(\ell)} + \theta^\star d_{B(\ell)} = 0$$

New solution

- $x_{B(\ell)}$ becomes 0 (exits)
- x_j becomes $\theta^\star$ (enters)

New basis

$$A_{\bar{B}} = \begin{bmatrix} A_{B(1)} & \ldots & A_{B(\ell-1)} & A_j & A_{B(\ell+1)} & \ldots & A_{B(m)} \end{bmatrix}$$

An iteration of the simplex method

Initialization

- a basic feasible solution x
- a basis matrix $A_B = \begin{bmatrix} A_{B(1)} & \dots, A_{B(m)} \end{bmatrix}$

Iteration steps

1. Compute the reduced costs $\bar{c}$
   - Solve $A_B^T p = c_B$
   - $\bar{c} = c - A^T p$
2. If $\bar{c} \geq 0$, x **optimal**. **break**
3. Choose j such that $\bar{c}_j < 0$
4. Compute search direction d with $d_j = 1$ and $A_B d_B = -A_j$
5. If $d_B \geq 0$, the problem is **unbounded** and the optimal value is $-\infty$. **break**
6. Compute step length $\theta^\star = \min\limits_{\{i \in B | d_i < 0\}} \left(-\frac{x_i}{d_i} \right)$
7. Define y such that $y = x + \theta^\star d$
8. Get new basis $\bar{B}$ (i exits and j enters)

Today’s agenda
[Chapter 3, LO]

- Find initial feasible solution
- Degeneracy
- Complexity

Find an initial point in simplex method

Initial basic feasible solution

$$\begin{aligned} \text{minimize} \quad & c^T x \\ \text{subject to} \quad & Ax = b \\ & x \geq 0 \end{aligned}$$

How do we get an initial **basic feasible solution** x and a **basis** B ?

Does it **exist**?

Finding an initial basic feasible solution

minimize	$c^T x$		**Auxiliary problem**	
subject to	$Ax = b$	$\longrightarrow$	minimize	$\mathbf{1}^T y$ ← Minimize violations
	$x \geq 0$		subject to	$Ax + y = b$
				$x \geq 0, y \geq 0$

Assumption $b \geq 0$ w.l.o.g. (if not multiply constraint by -1)

Trivial basic feasible solution: $x = 0, y = b$

Possible outcomes

- **Feasible problem** (cost = 0): $y^\star = 0$ and $x^\star$ is a basic feasible solution
- **Infeasible problem** (cost > 0): $y^\star > 0$ are the violations

Two-phase simplex method

Phase I

1. Construct **auxiliary problem** such that $b \geq 0$
2. Solve auxiliary problem using simplex method starting from $(x, y) = (0, b)$
3. If the optimal value is greater than 0, **problem infeasible**. **break**.

Phase II

1. Recover original problem (drop variables y and restore original cost)
2. Solve original problem starting from the solution x and its basis B.

Big-M method

Very large constant

$$\begin{aligned} \text{minimize} \quad & c^T x + M \mathbf{1}^T y \\ \text{subject to} \quad & Ax + y = b \\ & x \geq 0, y \geq 0 \end{aligned}$$

Incorporate penalty in the cost

- We can still use $y = b \geq 0$ as initial basic feasible solution
- If the problem is **feasible**, y will not be in the basis.

Remarks

- **Pro:** need to solve only one LP
- **Con:** it is not easy to pick M and it makes the problem badly scaled

Degeneracy

Degenerate basic feasible solutions

Inequality form polyhedron

A solution y is degenerate if $|\mathcal{I}(\bar{x})| > n$

$$P = \{x \mid Ax \leq b\}$$

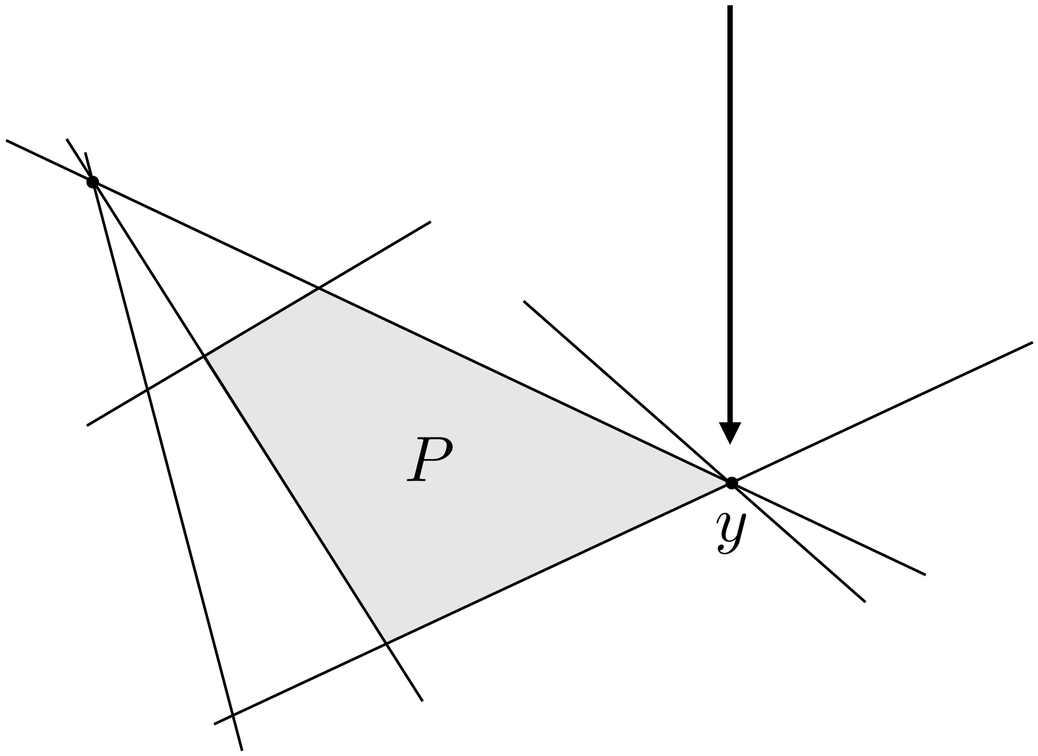

Degenerate basic feasible solutions

Standard form polyhedron

Given a basis matrix $A_B = \begin{bmatrix} A_{B(1)} & \dots & A_{B(m)} \end{bmatrix}$

we have basic feasible solution x:

- $A_B x_B = b$
- $x_i = 0, \ \forall i \neq B(1), \dots, B(m)$

$\longrightarrow$ If some of the $x_B = 0$, then it is a **degenerate solution**

$$P = \{x \mid Ax = b, \ x \geq 0\}$$

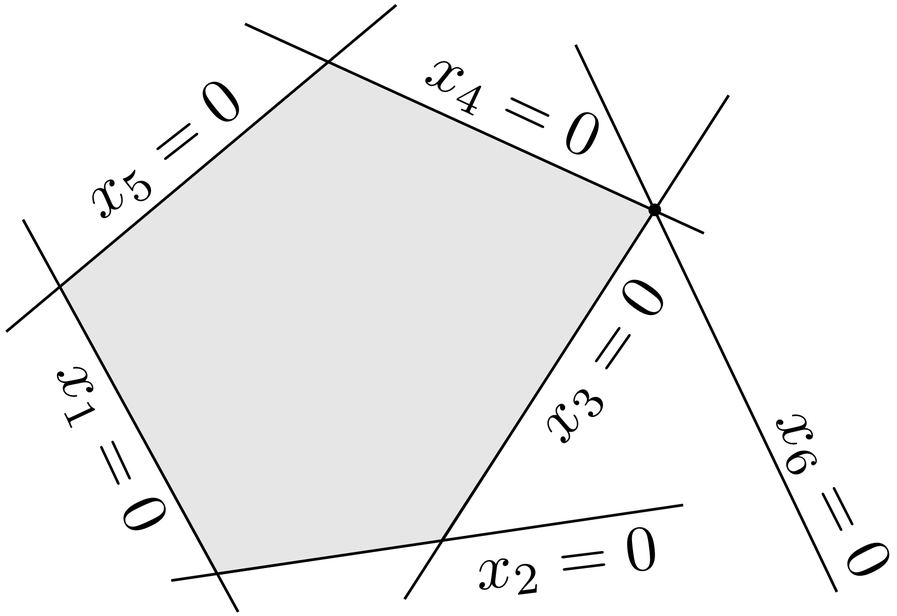

Degenerate basic feasible solutions

Example

$$
\begin{aligned}
x_1 + x_2 + x_3 &= 1 \\
-x_1 + x_2 - x_3 &= 1 \\
x_1, x_2, x_3 &\geq 0
\end{aligned}
$$

Degenerate solutions

Basis $B = \{1, 2\}$ $\longrightarrow$ $x = (0, 1, 0)$

Basis $B = \{2, 3\}$ $\longrightarrow$ $y = (0, 1, 0)$

Cycling

Stepsize

6. Compute step length $\theta^\star = \min_{\{i \in B | d_i < 0\}} \left(-\frac{x_i}{d_i} \right)$

$\downarrow$

If $i \in B$, $d_i < 0$ and $x_i = 0$ (degenerate)

$$\theta^\star = 0$$

Therefore $y = x + \theta^\star x = x$ and $B = \bar{B}$

Same solution and cost
Different basis

Finite termination **no longer guaranteed**!

How can we fix it?

Pivoting rules

Pivoting rules

Choose the index entering the basis

Simplex iterations

3. Choose j such that $\bar{c}_j < 0$ $\longrightarrow$ **Which j?**

Possible rules

- **Smallest subscript:** smallest j such that $\bar{c}_j < 0$
- **Most negative:** choose j with the most negative $\bar{c}_j$
- **Largest cost decrement:** choose j with the largest $\theta^\star|\bar{c}_j|$

Pivoting rules

Choose index exiting the basis

Simplex iterations

6. Compute step length $\theta^\star = \min_{\{i \in B | d_i < 0\}} \left(-\frac{x_i}{d_i} \right) \longrightarrow$

We can have more than one i for which $x_i = 0$ (**next** solution is **degenerate**)

Which i?

Smallest index rule

Smallest i such that $\theta^\star = -\frac{x_i}{d_i}$

Bland's rule to avoid cycles

Theorem
If we use the **smallest index rule** for choosing both the j entering the basis and the i leaving the basis, then **no cycling will occur**.

Proof idea [Ch 3, Sec 4, LP][Sec 3.4, LO]

- Assume Bland's rule is applied and there exists a cycle with different bases.
- Obtain contradiction.

Perturbation approach to avoid cycles

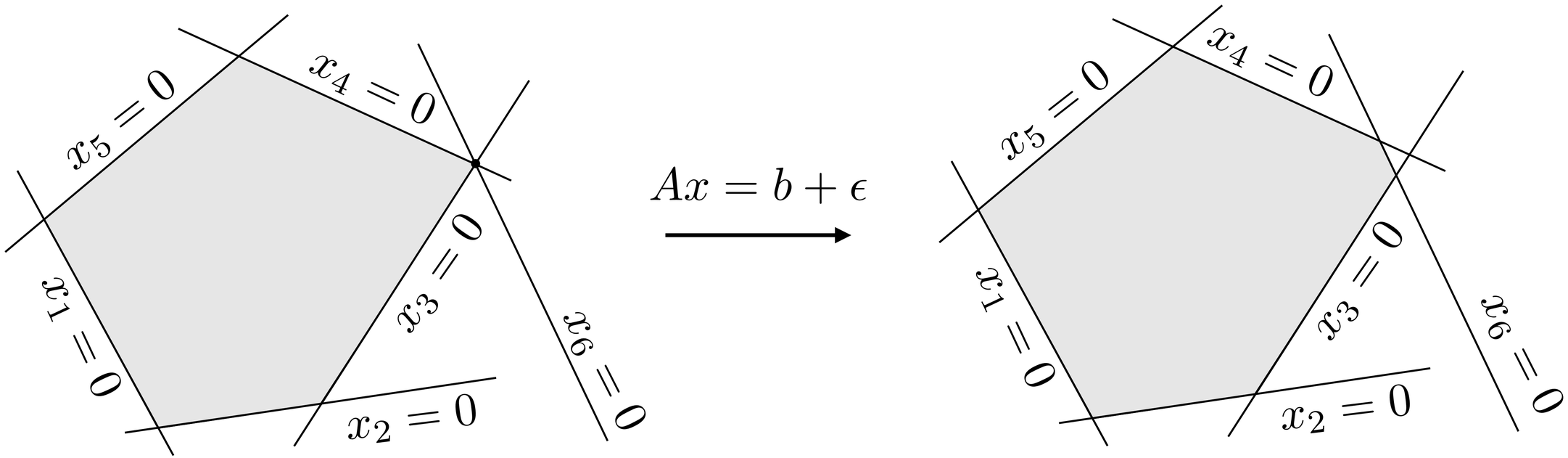

Complexity

Complexity

Basic operation: one simplex iteration

Estimate complexity of an algorithm

- Write number of basic operations as a **function of problem dimensions**
- Simplify and keep only leading terms

Complexity

Notation

We write $g(x) \sim O(f(x))$ if and only if there exist $c > 0$ and an x_0 such that

$$|g(x)| \leq cf(x), \quad \forall x \geq x_0$$

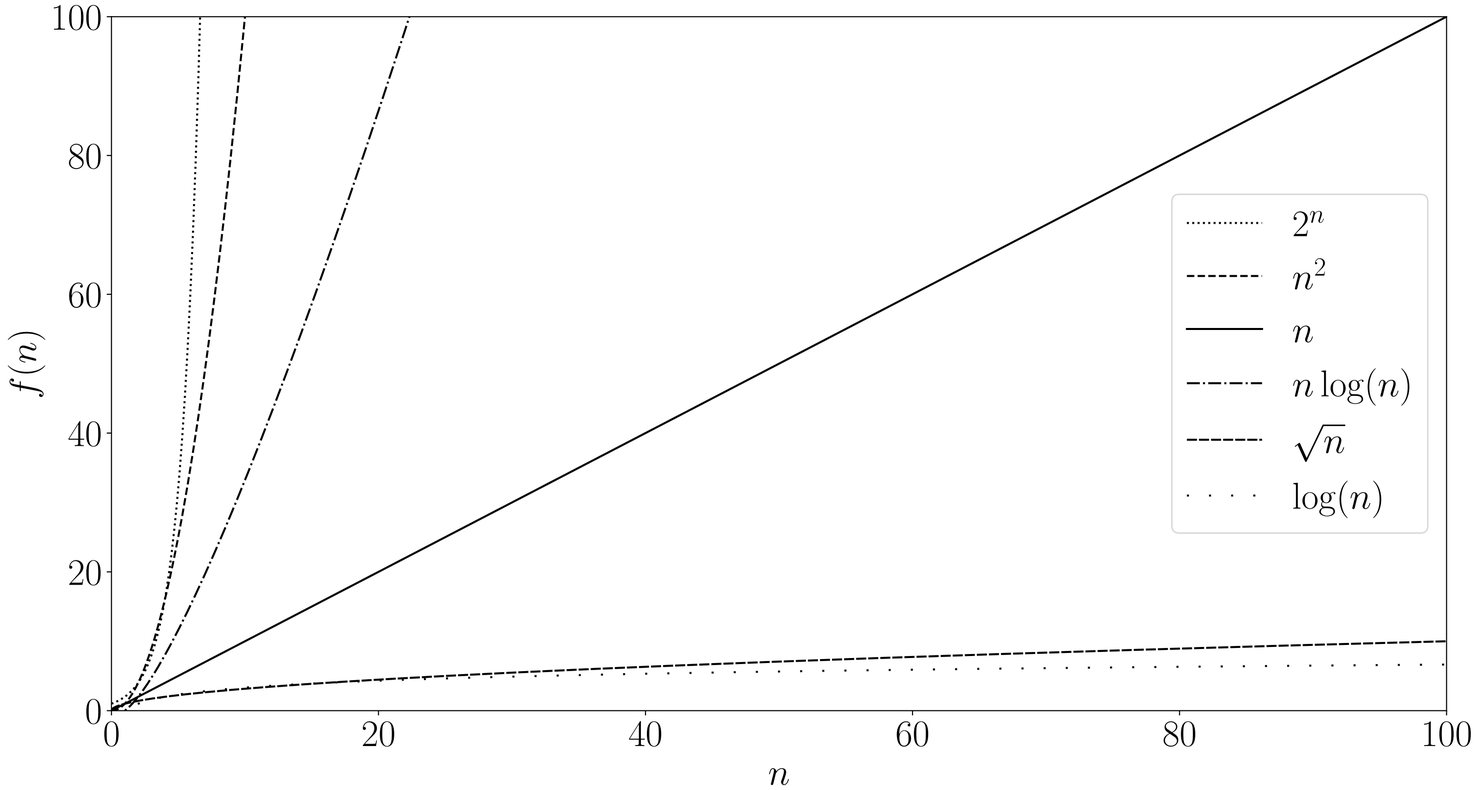

Polynomial
Practical

Exponential
Impractical!

$\mathcal{P}$ and $\mathcal{NP}$

Complexity class $\mathcal{P}$

There exists a polynomial time algorithms to solve it

Complexity class $\mathcal{NP}$

Given a candidate solution, there exists a polynomial time algorithm to verify it.

Complexity class $\mathcal{NP}$-hard

At least as hard as the hardest problem in $\mathcal{NP}$

$\downarrow$

We don't know any **polynomial time algorithm**

Million dollar problem: $\mathcal{P} = \mathcal{NP}$?

- We know that $\mathcal{P} \subset \mathcal{NP}$
- Does it exist a polynomial time algorithm for $\mathcal{NP}$-hard problems?

Complexity of the simplex method

Example of worst-case behavior

Innocent-looking problem

minimize $-x_n$

subject to $0 \leq x \leq 1$

2^n **vertices**

$2^n/2$ vertices: cost = 1

$2^n/2$ vertices: cost = 0

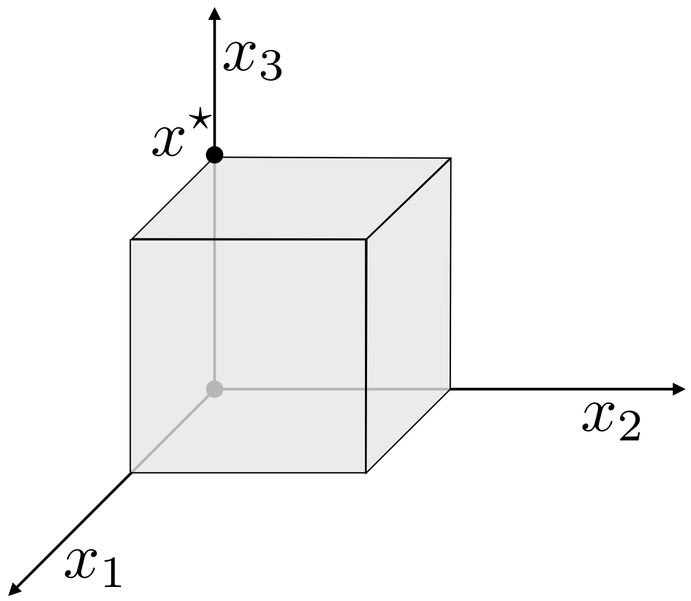

Perturb unit cube

minimize $-x_n$

subject to $\epsilon \leq x_1 \leq 1$

$\epsilon x_{i-1} \leq x_i \leq 1 - \epsilon x_{i-1}, \quad i = 2, \ldots, n$

Complexity of the simplex method

Example of worst-case behavior

$$
\begin{array}{ll}
\text{minimize} & -x_n \\
\text{subject to} & \epsilon \leq x_1 \leq 1 \\
& \epsilon x_{i-1} \leq x_i \leq 1 - \epsilon x_{i-1}, \quad i = 2, \ldots, n
\end{array}
$$

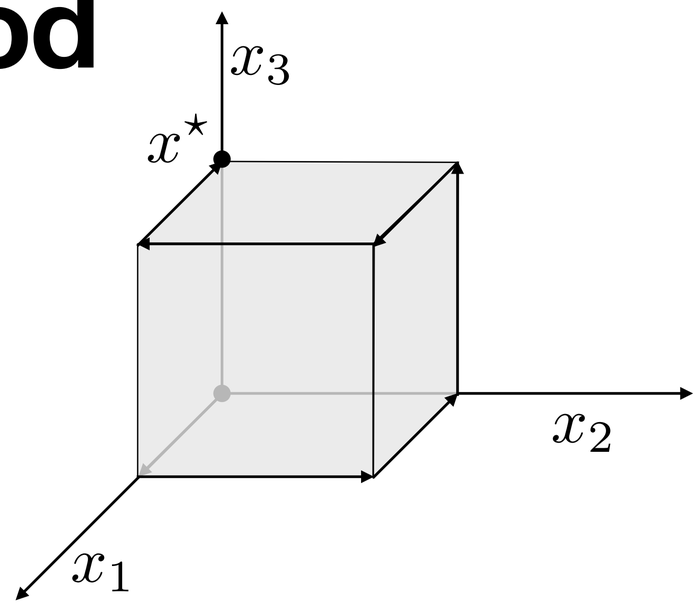

Theorem

- The vertices can be ordered so that each one is adjacent to and has a **lower cost than the previous one**
- There exists a pivoting rule under which the simplex method terminates after $2^n - 1$ **iterations**

Remark

- A **different pivot rule** would have converged in one iteration.
- We have a bad example for every pivot rule.

Complexity of the simplex method

We do **not know any polynomial version of the simplex method**, no matter which pivoting rule we pick. $\longrightarrow$ Still **open research question!**

Worst-case

There are problem instances where the simplex method will run an **exponential number of iterations** in terms of the dimensions n and m: $O(2^n)$

Good news: average-case

Practical performance is very good. On average, it stops in $O(n)$ iterations.

The simplex method

Today, we learned to:

- **Formulate** auxiliary problem to find starting simplex solutions
- **Apply** pivoting rules to avoid cycling in degenerate linear programs
- **Analyze** complexity of the simplex method

Next lecture

- Numerical linear algebra
- “Realistic" simplex implementation
- Examples