ORF307 – Optimization

20. Integer optimization

Bartolomeo Stellato — Spring 2025

Announcements

- Last precepts next week
- Last homework out Monday next week

Today’s lecture

Mixed-integer optimization

- Mixed-integer programs
- Modeling techniques
- Formulations
- Ideal formulations

Mixed-integer optimization

Mixed-integer program

Optimization problem where some variables are restricted to be integer

$$
\begin{array}{ll}
\text{minimize} & c^T x \\
\text{subject to} & Ax \leq b \\
& x_i \in \mathbf{Z}, \quad i \in \mathcal{I}
\end{array}
$$

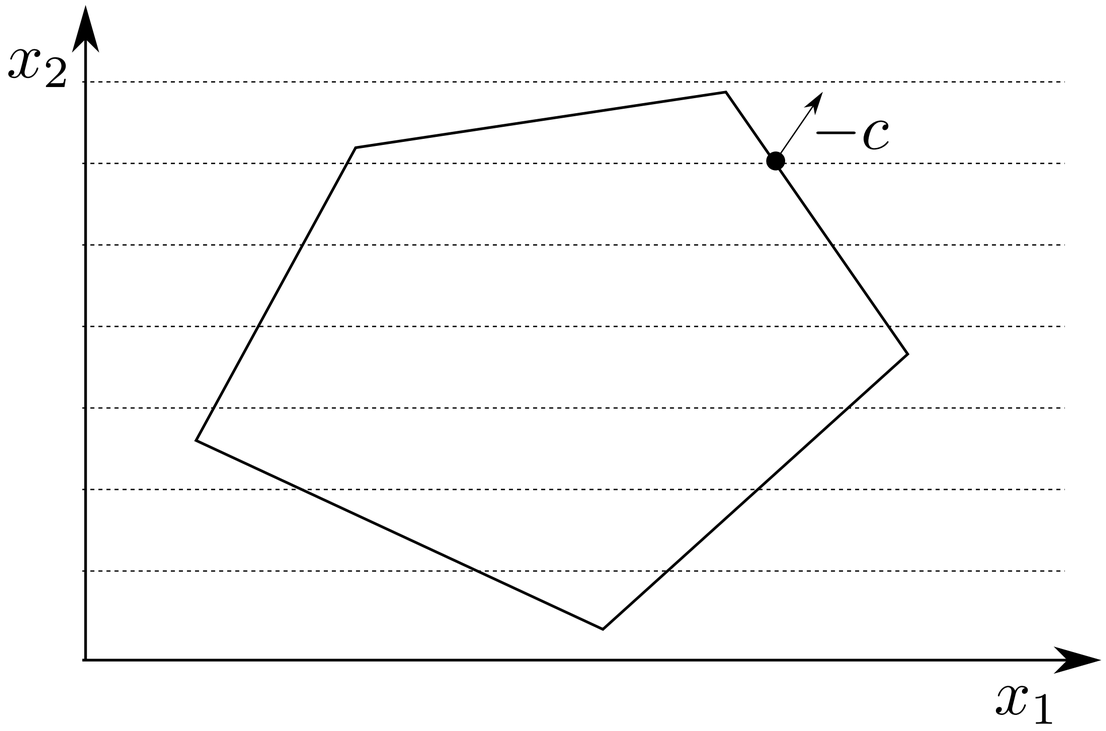

Mixed-integer program

Special cases

Integer linear program

$\mathcal{I} = \{1, \ldots, n\}$

(all variables are integer)

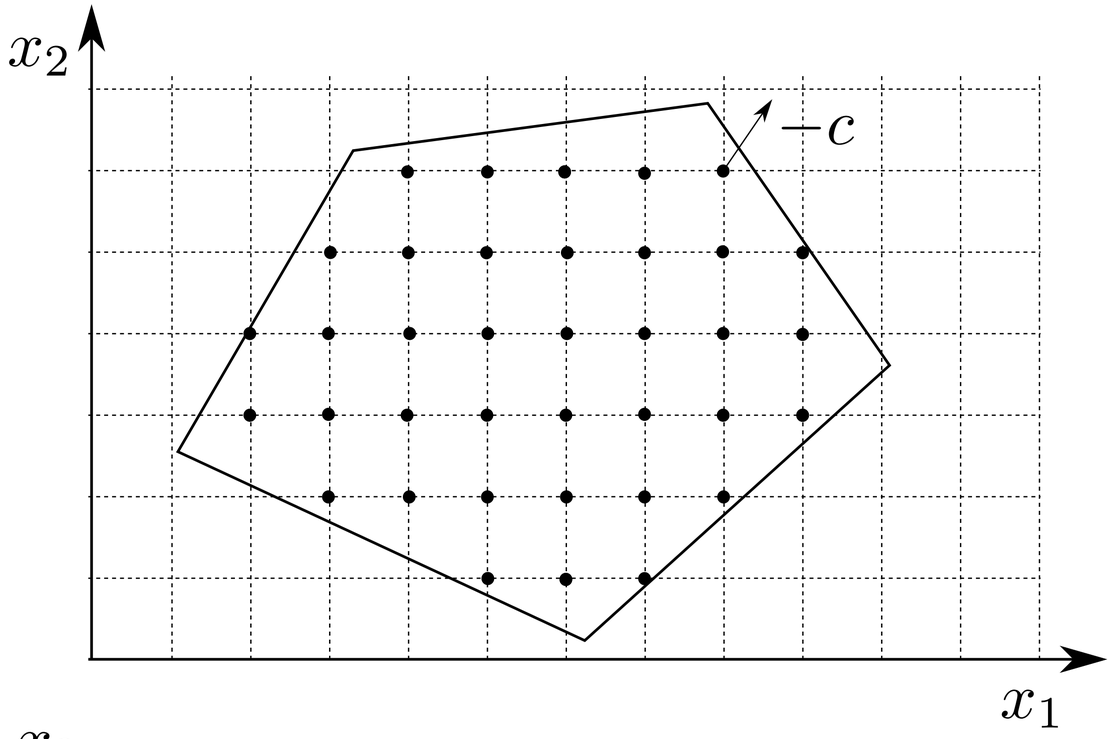

Boolean linear program

$x_i \in \{0, 1\}, \quad i \in \mathcal{I}$

(integer variables take values 0 or 1)

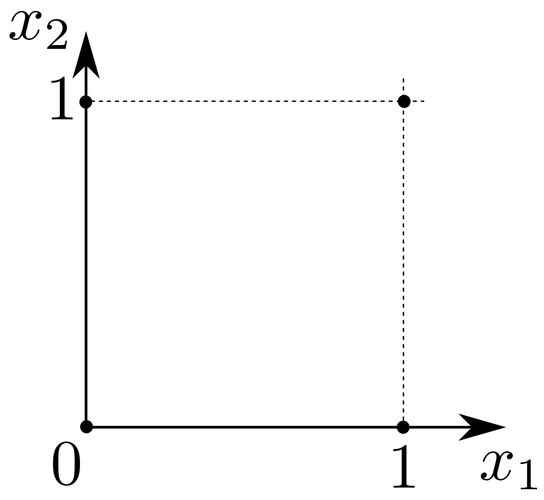

Modeling techniques

Binary choice

$$x_i = \begin{cases} 1 & \text{event occurs} \\ 0 & \text{otherwise} \end{cases} \longrightarrow \quad x \in \{0,1\}^n$$

Examples

- Perform an financial transaction
- Select an arc in a graph
- Open a store

Knapsack problem

Goal decide between n items to put into knapsack

- Maximum total weight: b
- Weight of item i: a_i
- Value of item i: c_i

Formulation

$$\begin{array}{ll} \text{maximize} & c^T x \\ \text{subject to} & a^T x \leq b \\ & x_i \in \{0, 1\}, \quad i = 1, \ldots, n \end{array}$$

Logical relations

$x \in \{0, 1\}^n$

At most one event occurs

$$\mathbf{1}^T x \leq 1$$

Neither or both events occur

$$x_1 = x_2$$

If $x_2 = 0$ (does not occur), then $x_1 = 0$ (does not occur)

$$x_1 \leq x_2$$

Facility location problem

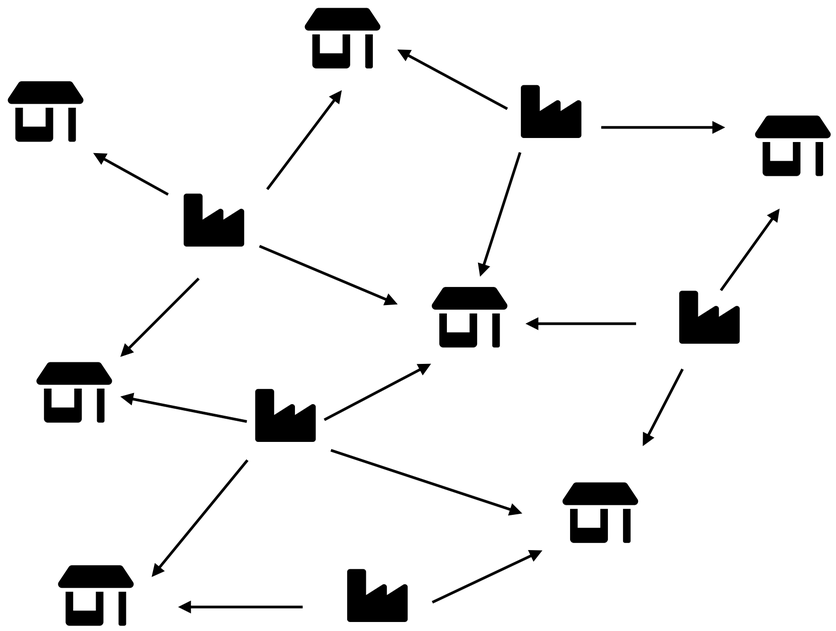

Data

- n potential facility locations, m clients
- c_j cost of opening facility at location j
- d_{ij} cost of serving client i from location j

Variables

$$y_j = \begin{cases} 1 & \text{location } j \text{ is selected} \\ 0 & \text{otherwise} \end{cases}$$

$$x_{ij} = \begin{cases} 1 & \text{location } j \text{ serves client } i \\ 0 & \text{otherwise} \end{cases}$$

Problem

$$\begin{array}{ll} \text{minimize} & \sum_{j=1}^{n} c_j y_j + \sum_{i=1}^{m} \sum_{j=1}^{n} d_{ij} x_{ij} \\ \text{subject to} & \sum_{j=1}^{n} x_{ij} = 1, \quad i = 1, \ldots, m \\ & x_{ij} \leq y_j, \quad i = 1, \ldots, m, \quad j = 1, \ldots, n \\ & x_{ij}, y_j \in \{0, 1\} \end{array}$$

Mixed-logical relations (big-M formulations)

$x \in \mathbf{R},\ y \in \{0, 1\}$

If $y = 0$, then $x = 0$. Otherwise, x unconstrained.

$$0 \leq x \leq yM$$

Disjunctive constraints

either $a^T x \leq b$ or $d^T x \leq f$ is valid

$$a^T x \leq b + yM$$

$$d^T x \leq f + (1 - y)M$$

Cardinality

$x \in \mathbf{R}^n, \; y \in \{0,1\}^n$

Cardinality (0-norm)

number of nonzero elements

$$\operatorname{card} x = \|x\|_0 = \sum \{i \mid x_i \neq 0\}$$

Cardinality constraint

$$\operatorname{card} x \leq k \quad \longrightarrow \quad \begin{aligned} &\sum_{i=1}^{m} y_i \leq k \\ &-My_i \leq x_i \leq My_i, \quad i = 1, \ldots, n \\ &y_i \in \{0,1\} \end{aligned}$$

Restricted range of values

We want to restrict variable $x \in \mathbf{R}$ to take values $\{a_1, \ldots, a_d\}$

Introduce d binary variables $z_i \in \{0, 1\}$

$$x = \sum_{j=1}^{d} a_j z_j$$

$$\sum_{j=1}^{d} z_j = 1$$

$$z_j \in \{0, 1\}$$

$$\longrightarrow$$

Vector form

$$x = a^T z$$

$$\mathbf{1}^T z = 1$$

$$z \in \{0, 1\}^d$$

Signal decoding

Message

n-vector $\hat{x}$

Channel

$$y = H\hat{x} + v$$

Signal

m-vector y

m-vector v are (unknown) *noises* or *measurement errors*

Goal recover message $\hat{x}$

Signal constellation

At every time k, x_k can take only values $\{a_1, \ldots, a_d\}$

Signal decoding problem

$$\begin{array}{ll} \text{minimize} & \|Hx - y\|_1 \\ \text{subject to} & x_k \in \{a_1, \ldots, a_d\}, \quad k = 1, \ldots, n \end{array}$$

Signal decoding as mixed-integer optimization

Signal decoding problem

$$\begin{array}{ll} \text{minimize} & \|Hx - y\|_1 \\ \text{subject to} & x_k \in \{a_1, \ldots, a_d\}, \quad k = 1, \ldots, n \end{array}$$

Mixed-integer optimization

$$\begin{array}{ll} \text{minimize} & \mathbf{1}^T u \\ \text{subject to} & -u \leq Hx - y \leq u \\ & x_k = a^T z_k, \quad k = 1, \ldots, n \\ & \mathbf{1}^T z_k = 1, \quad k = 1, \ldots, n \\ & z_k \in \{0, 1\}^d \end{array}$$

Signal decoding example

Exact message $\hat{x} \in \{-3, -1, 1, 3\}^{40}$

Noisy signal $y = H\hat{x} + v \in \mathbf{R}^{200}$

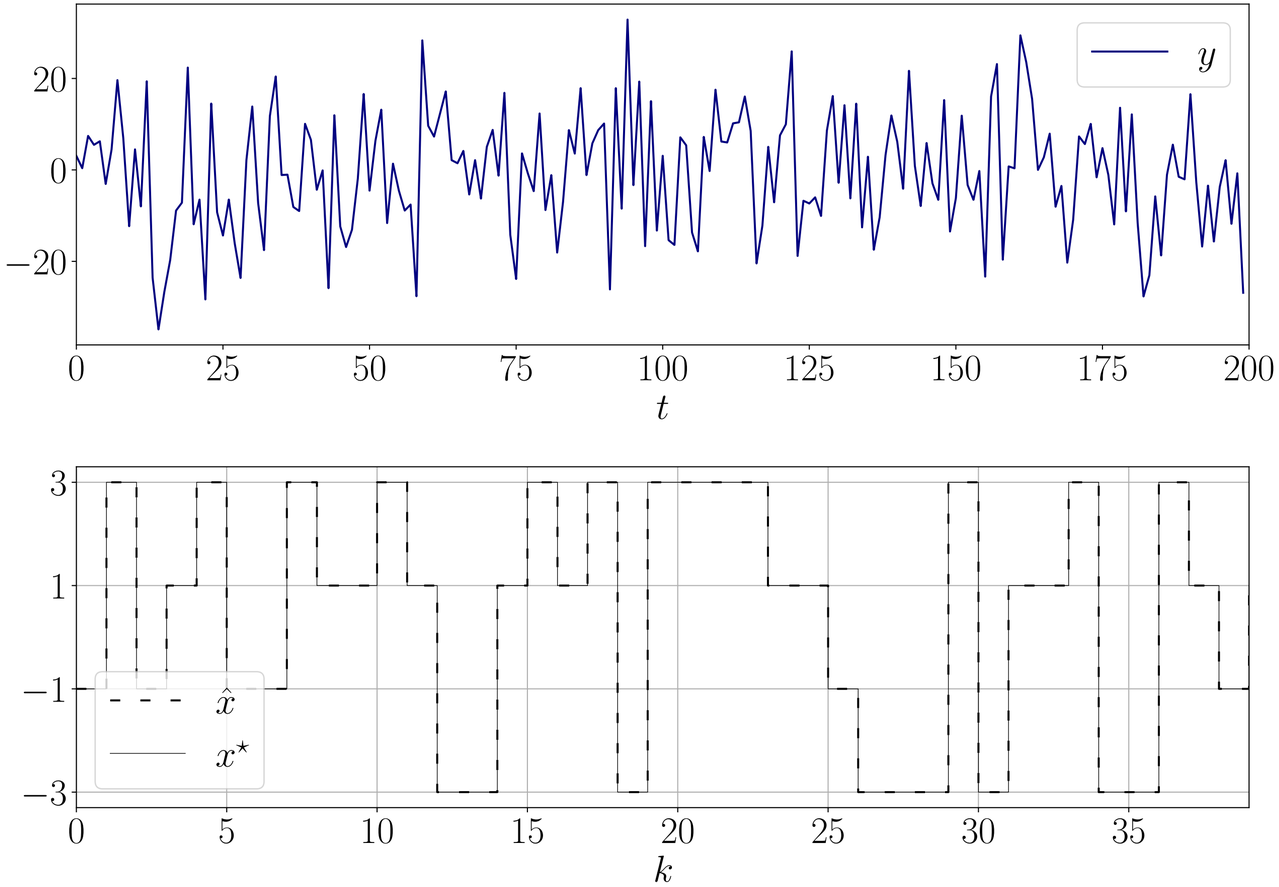

Exact message decoded!

Relaxations

Relaxations

Remove integrality constraints

P_{ip}

$$\begin{array}{ll} \text{minimize} & c^T x \\ \text{subject to} & Ax \leq b \\ & x_i \in \mathbf{Z}, \quad i \in \mathcal{I} \end{array}$$

$$\begin{array}{ll} \text{minimize} & c^T x \\ \text{subject to} & Ax \leq b \end{array}$$

P_{rel}

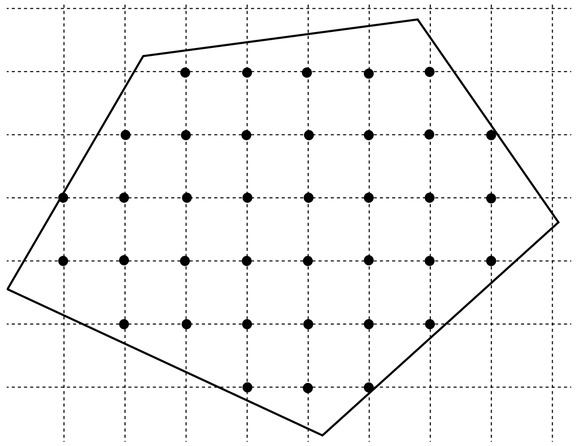

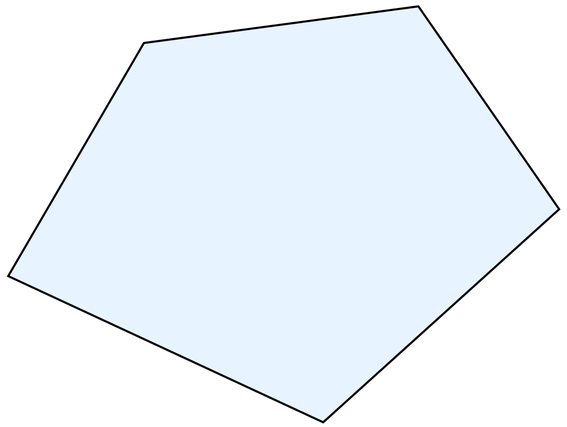

$P_{\text{ip}} \subset P_{\text{rel}}$

Relaxations provide **lower bounds** to $p^\star_{\text{ip}}$

$$p^\star_{\text{rel}} \leq p^\star_{\text{ip}}$$

Multiple formulations exist

$$\begin{array}{ll} \text{minimize} & c^T x \\ \text{subject to} & Ax \leq b \\ & x_i \in \mathbf{Z}, \quad i \in \mathcal{I} \end{array}$$

Equivalent formulations
(same feasible points)
with different relaxations

Formulation 1

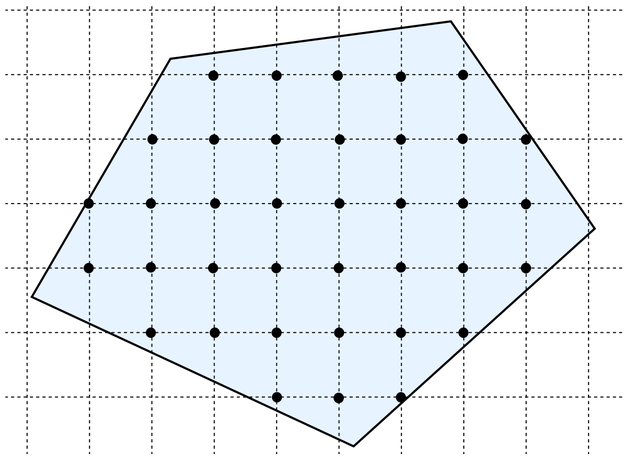

Formulation 2

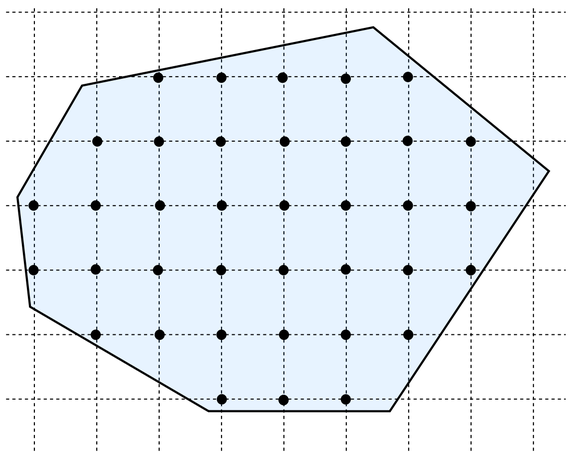

Which one is better?

$$p^\star_{\text{rel1}} \begin{array}{c} \leq \\ \geq \end{array} p^\star_{\text{rel2}}?$$

Facility location problem

Multiple formulations

Formulation 1

$$
\begin{array}{ll}
\text{minimize} & \sum_{j=1}^{n} c_j y_j + \sum_{i=1}^{m} \sum_{j=1}^{n} d_{ij} x_{ij} \\
\text{subject to} & \sum_{j=1}^{n} x_{ij} = 1, \quad i = 1, \ldots, m \\
& x_{ij} \leq y_j, \quad i = 1, \ldots, m, \quad j = 1, \ldots, n \\
& x_{ij}, y_j \in \{0, 1\}
\end{array}
$$

Formulation 2 (fewer constraints)

$$
\begin{array}{ll}
\text{minimize} & \sum_{j=1}^{n} c_j y_j + \sum_{i=1}^{m} \sum_{j=1}^{n} d_{ij} x_{ij} \\
\text{subject to} & \sum_{j=1}^{n} x_{ij} = 1, \quad i = 1, \ldots, m \\
& \sum_{i=1}^{m} x_{ij} \leq m y_j, \quad j = 1, \ldots, n \\
& x_{ij}, y_j \in \{0, 1\}
\end{array}
$$

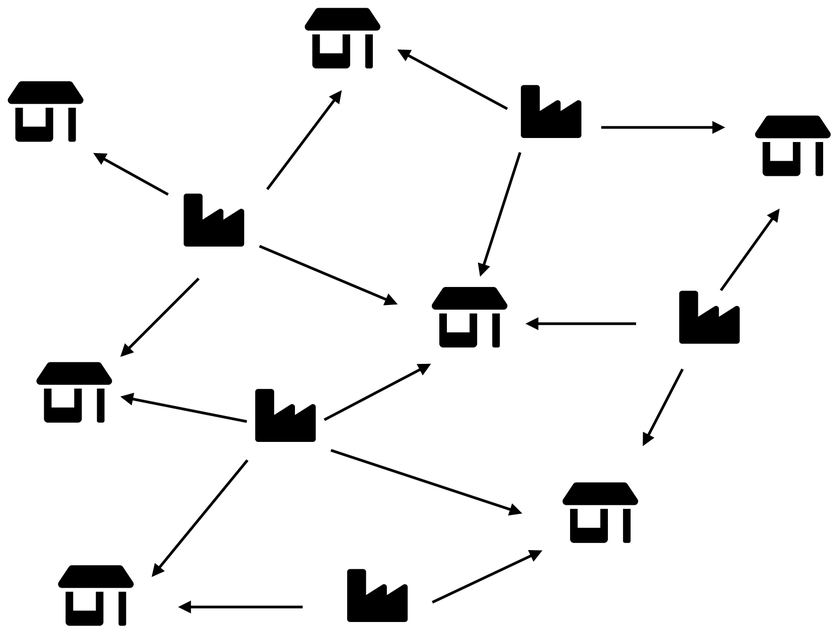

Are they both valid?

Which one is better?

Facility location problem

Multiple formulations

Formulation 1

$$P_{\text{rel1}} = \left\{ \sum_{j=1}^{n} x_{ij} = 1, \quad x_{ij} \leq y_j, \quad x_{ij}, y_j \in [0,1] \right\}$$

Formulation 2

$$P_{\text{rel2}} = \left\{ \sum_{j=1}^{n} x_{ij} = 1, \quad \sum_{i=1}^{m} x_{ij} \leq m y_j, \quad x_{ij}, y_j \in [0,1] \right\}$$

Relationship

$$P_{\text{rel1}} \subset P_{\text{rel2}} \quad \Longrightarrow \quad p^\star_{\text{rel2}} \leq p^\star_{\text{rel1}} \leq p^\star = p^\star_1 = p^\star_2$$

Formulation 1 is better

Facility location problem

Multiple formulations proof $P_{\text{rel1}} \subset P_{\text{rel2}}$

Formulation 1: P_{rel1}

$$x_{ij} \leq y_j,\ \forall i, j \quad \Longleftrightarrow \quad \max_i x_{ij} \leq y_j$$

Formulation 2: P_{rel2}

$$\sum_{i=1}^{m} x_{ij} \leq m y_j,\ \forall j \quad \Longleftrightarrow \quad \mathbf{avg}_i\, x_{ij} \leq y_j$$

Maximum less than y_j
implies average less than y_j $\longrightarrow$ $P_{\text{rel1}} \subseteq P_{\text{rel2}}$

Average less than y_j
doesn't imply maximum less than y_j $\longrightarrow$ $P_{\text{rel1}} \neq P_{\text{rel2}}$

- $(x_{1j}, x_{2j}, x_{3j}) = (0.3, 0.4, 0.5)$
- $y_j = 0.45$

$\blacksquare$

Ideal formulations

What's the best possible formulation?

Problem

$$\begin{array}{ll} \text{minimize} & c^T x \\ \text{subject to} & Ax \leq b \\ & x_i \in \mathbf{Z}, \quad i \in \mathcal{I} \end{array}$$

Relaxation

$$\begin{array}{ll} \text{minimize} & c^T x \\ \text{subject to} & Ax \leq b \end{array}$$

What happens if the relaxation solution is integer feasible point?

We found an optimal solution!

Does this formulation always exist?

Convex hull

Recap

The **convex hull** is the set of all possible convex combinations of the points.

$$\mathbf{conv}\, C = \left\{ \sum_{i=1}^{n} \alpha_i x_i \mid \alpha \geq 0, \quad \mathbf{1}^T \alpha = 1 \right\}$$

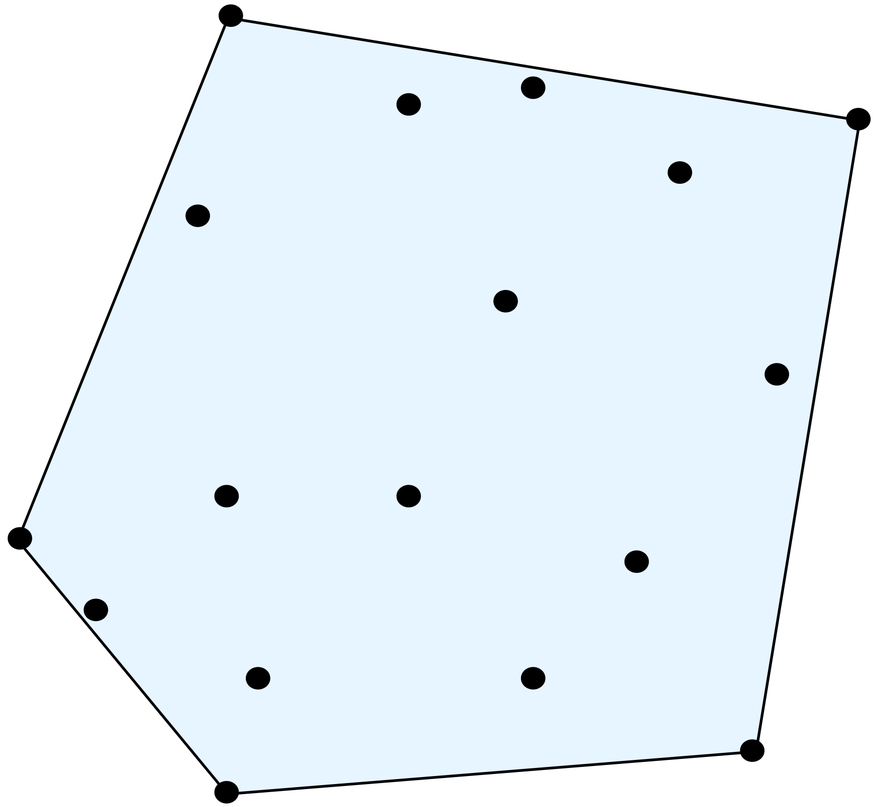

What is the convex hull of an integer optimization problem?

Convex hull of integer optimization

$$\begin{array}{ll} \text{minimize} & c^T x \\ \text{subject to} & Ax \leq b \\ & x_i \in \mathbf{Z}, \quad i \in \mathcal{I} \end{array}$$

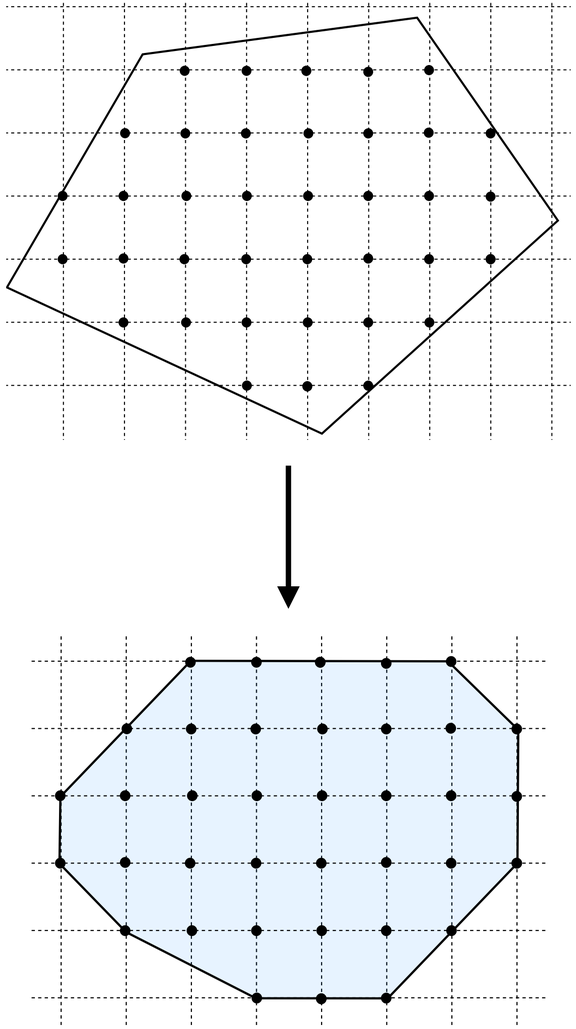

The convex hull has integer feasible extreme points

$$\mathbf{conv}\, P = \mathbf{conv}\{x \mid Ax \leq b, \quad x_i \in \mathbf{Z}, \quad i \in \mathcal{I}\}$$

Ideal formulations

A formulation is ideal if solving its relaxation gives an integer feasible point

$$\begin{array}{ll} \text{minimize} & c^T x \\ \text{subject to} & Ax \leq b \\ & x_i \in \mathbf{Z}, \quad i \in \mathcal{I} \end{array} \longrightarrow \begin{array}{ll} \text{minimize} & c^T x \\ \text{subject to} & Ax \leq b \end{array} \xrightarrow{\textbf{integer feasible}} x^\star$$

This happens if

$$\mathbf{conv}\, P = \{Ax \leq b\}$$

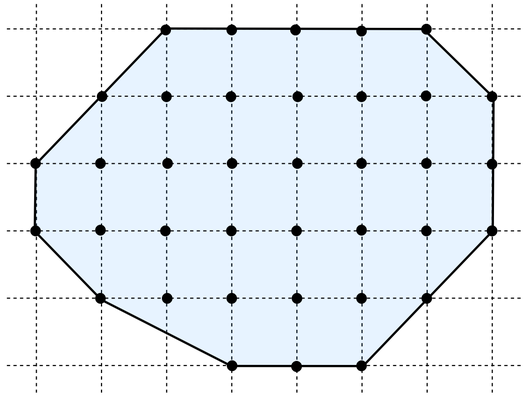

It is very hard to construct ideal formulations!

Facility location problem

Formulation 1

$$
\begin{array}{ll}
\text{minimize} & \sum_{j=1}^{n} c_j y_j + \sum_{i=1}^{m} \sum_{j=1}^{n} d_{ij} x_{ij} \\
\text{subject to} & \sum_{j=1}^{n} x_{ij} = 1, \quad i = 1, \ldots, m \\
& x_{ij} \leq y_j, \quad i = 1, \ldots, m, \quad j = 1, \ldots, n \\
& x_{ij}, y_j \in \{0, 1\}
\end{array}
$$

Formulation 2 (fewer constraints)

$$
\begin{array}{ll}
\text{minimize} & \sum_{j=1}^{n} c_j y_j + \sum_{i=1}^{m} \sum_{j=1}^{n} d_{ij} x_{ij} \\
\text{subject to} & \sum_{j=1}^{n} x_{ij} = 1, \quad i = 1, \ldots, m \\
& \sum_{i=1}^{m} x_{ij} \leq m y_j, \quad j = 1, \ldots, n \\
& x_{ij}, y_j \in \{0, 1\}
\end{array}
$$

Ranking relaxations

$$\mathbf{conv}\, P \subseteq P_{\text{rel1}} \subseteq P_{\text{rel2}}$$

Judging formulations

Size of feasible region

Goal: $\mathbf{conv}\, P \approx \{Ax \leq b\}$

Objective function value

Goal: $p^\star_{\mathrm{rel}} \approx p^\star_{\mathrm{ip}}$

Problem size

Goal: keep moderate LP relaxation size (unfortunately, better formulations tend to have more variables/constraints)

Problem formulation

$$\begin{array}{ll} \text{minimize} & c^T x \\ \text{subject to} & Ax \leq b \\ & x_i \in \mathbf{Z}, \quad i \in \mathcal{I} \end{array}$$

Minimum cost network flow

$$\begin{array}{ll} \text{minimize} & c^T x \\ \text{subject to} & Ax = b \\ & 0 \leq x \leq u \end{array} \longrightarrow$$

Integrality theorem

If A totally unimodular
(e.g., graph arc-node incidence)
b and u are integral
solutions $x^\star$ are integral

Formulation is ideal

$$\begin{array}{ll} \text{minimize} & c^T x \\ \text{subject to} & Ax = b \\ & 0 \leq x \leq u \\ & x \in \mathbf{Z}^n \end{array}$$

Very easy special case!

How do we solve integer optimization problems?

$$\begin{array}{ll} \text{minimize} & c^T x \\ \text{subject to} & Ax \leq b \\ & x_i \in \mathbf{Z}, \quad i \in \mathcal{I} \end{array}$$

Idea: Refine the feasible set until the relaxation gives integer feasible solutions!

Mixed-integer optimization

Today, we learned to:

- **Define** mixed-integer optimization problems
- **Model** logical relationships with integer variables and constraints
- **Analyze** relaxations and formulations

References

- D. Bertsimas & J. Tsitsiklis “Introduction to Linear Optimization”
  - Chapter 10: integer programming formulations
- R. Vanderbei “Linear Programming”
  - Chapter 23: Integer programming

Next lecture

- Integer optimization algorithms